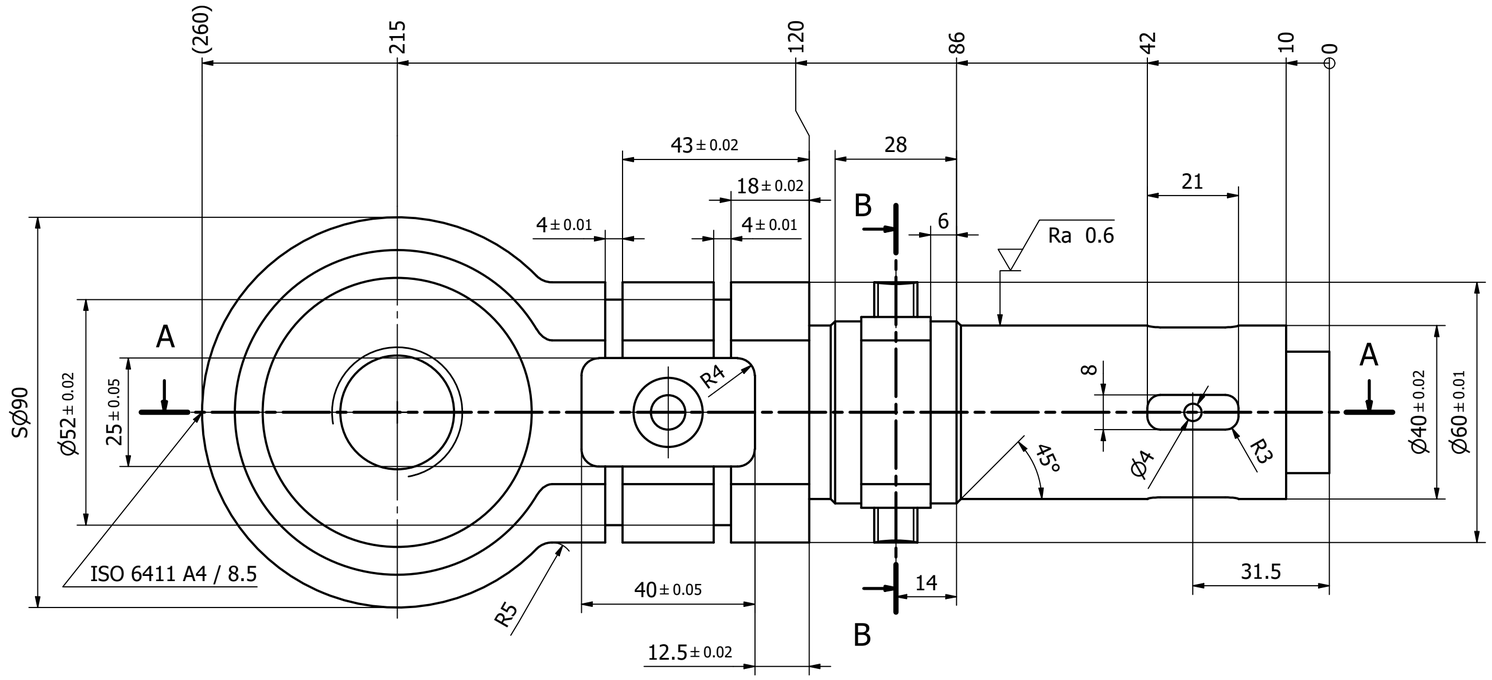


B-B ( 1:1 )

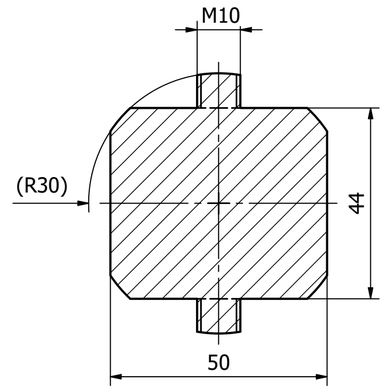


A-A ( 1:1 )

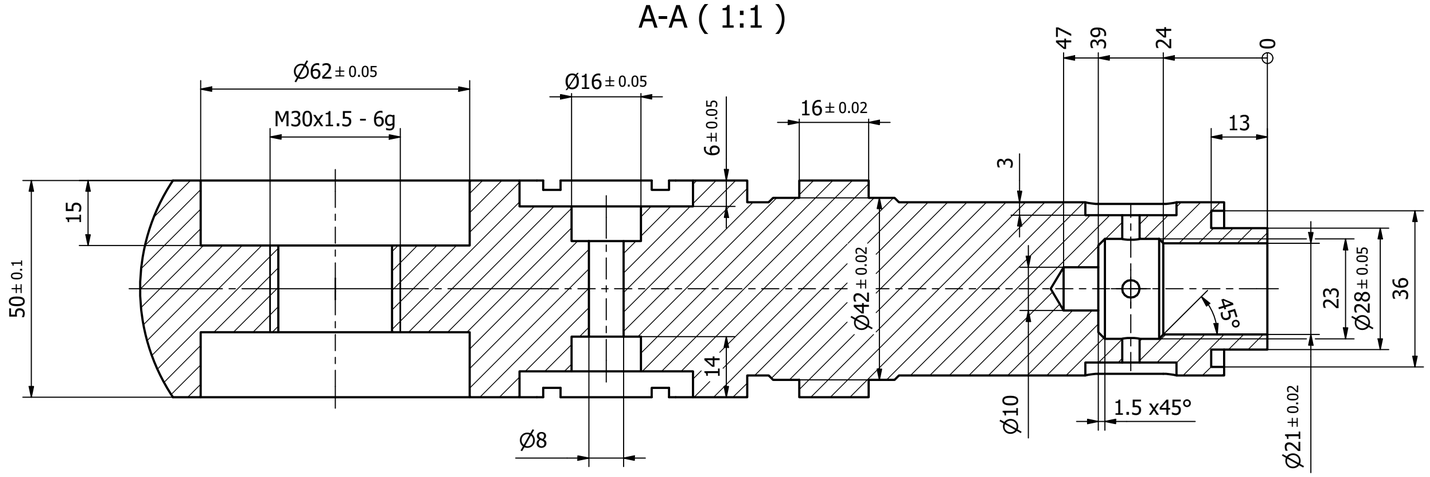


( 1:2 )

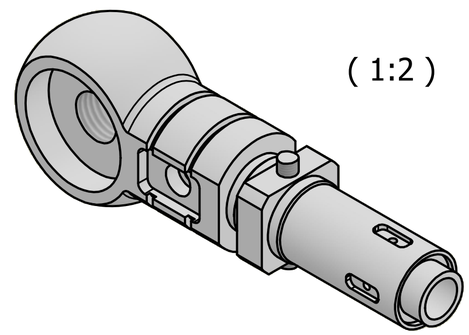

-0.6 / -0.4

+0.4 / +0.2

Ra 1.6 ( Ra 0.6 )

worldskills Shanghai2022

Test Project for the 46th WorldSkills Competition in Shanghai, China 2022

Copyright 2022 © Worldskills International
All Rights Reserved

| | | | |
|---|---|---|---|
| Skill: CNC Turning | | | |
| Design by: Gernoth Dolinar | | General Tolerance: ISO 2768 - fK | |
| Issued: 09/05/2022 | Scale: 1:1 | Paper: A2 | Page: 1 of 1 |
| Description: | | | Rev: 1 |
| Name: Module 3 | | | Projection ISO 5456-2 |